CLUTCH MASTER CYLINDER

COMPONENTS

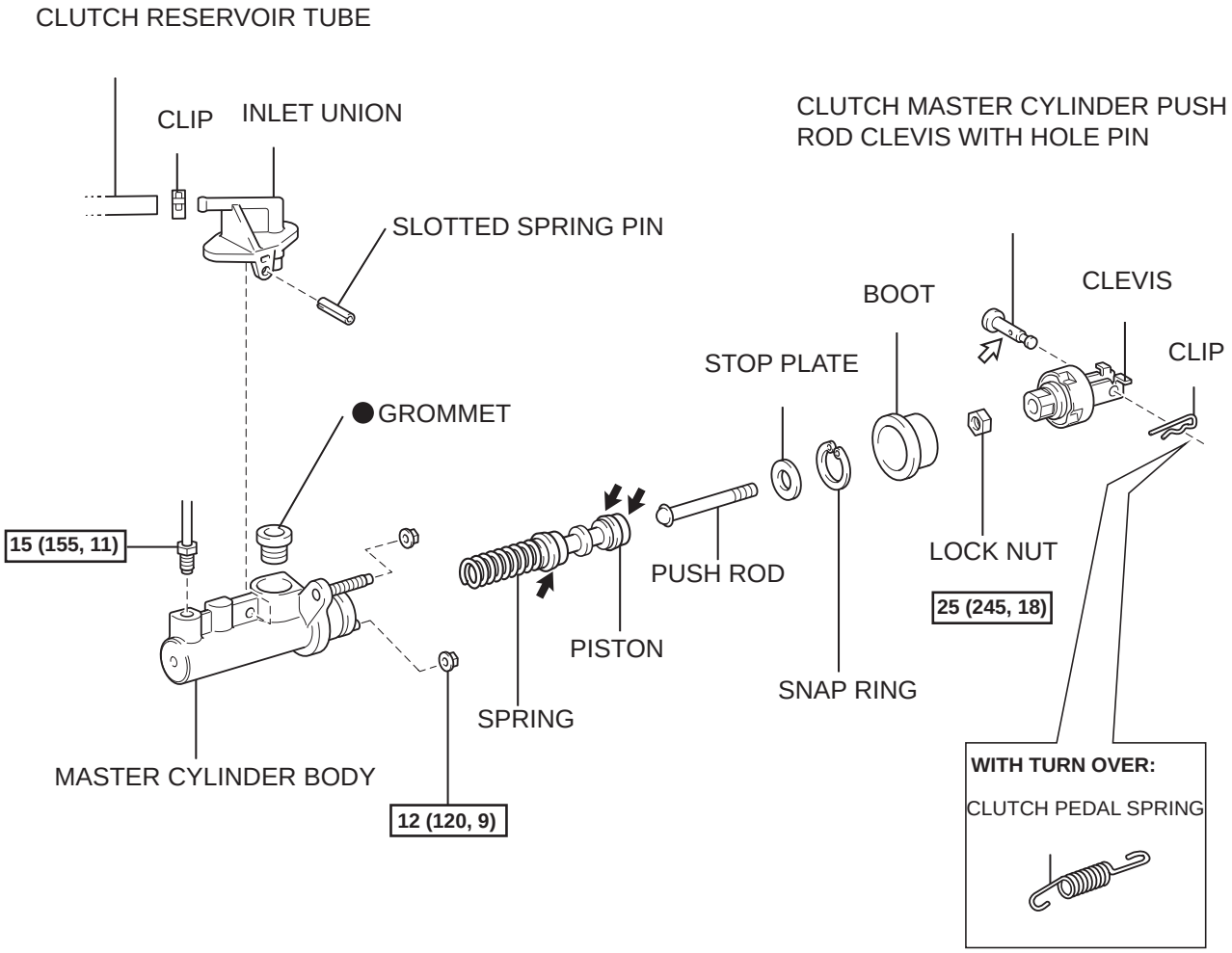

N*m (kgf*cm, ft.*lbf) : Specified torque

● Non-reusable part

⬅ Lithium soap base glycol grease

⇦ MP grease

N

C119560E02

CL

cardiagn.com

REMOVAL

1. **DRAIN CLUTCH FLUID**
2. **REMOVE BRAKE MASTER CYLINDER SUB-ASSEMBLY (See page BR-15)**
3. **REMOVE BRAKE BOOSTER ASSEMBLY (See page BR-23)**
4. **DISCONNECT CLUTCH RESERVOIR TUBE**
   (a) Loosen the clip and disconnect the clutch reservoir tube from the clutch master cylinder assembly.
   HINT:
   Use a container to catch the fluid.

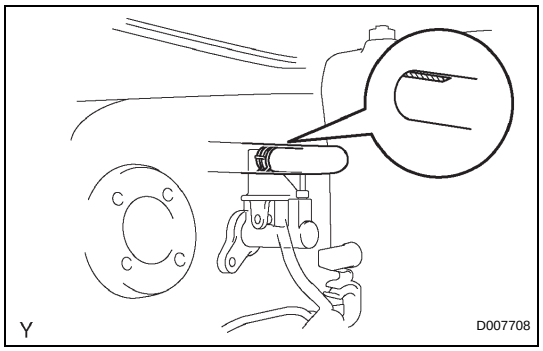

5. **DISCONNECT CLUTCH MASTER CYLINDER TO FLEXIBLE HOSE TUBE**
   (a) Using SST, disconnect the flexible hose tube.
   HINT:
   Use a container to catch the fluid.
   SST 09023-00101
6. **REMOVE CLUTCH PEDAL SPRING (WITHOUT TURN OVER)**

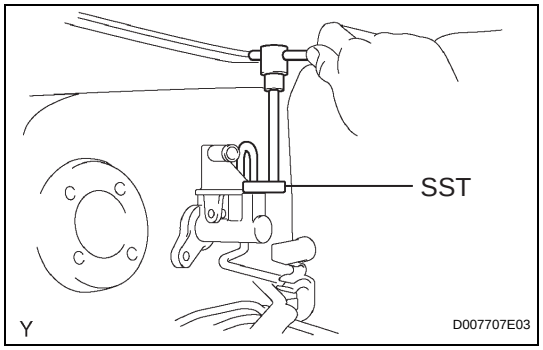

7. **REMOVE CLUTCH MASTER CYLINDER PUSH ROD CLEVIS WITH HOLE PIN**
   (a) Remove the clip and hole pin.
8. **REMOVE CLUTCH MASTER CYLINDER ASSEMBLY**
   (a) Remove the 2 nuts and clutch master cylinder assembly.

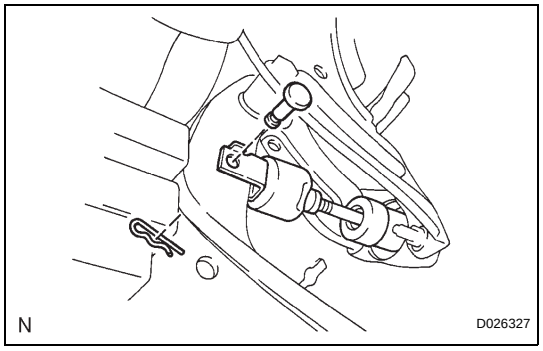

DISASSEMBLY

1. **REMOVE CLUTCH MASTER CYLINDER KIT**
   (a) Using a pin punch and a hammer, drive out the slotted spring pin.
   (b) Remove the inlet union and grommet.
   (c) Loosen the lock nut, and remove the clevis.
   (d) Remove the lock nut from the push rod.
   (e) Remove the boot from the cylinder body.

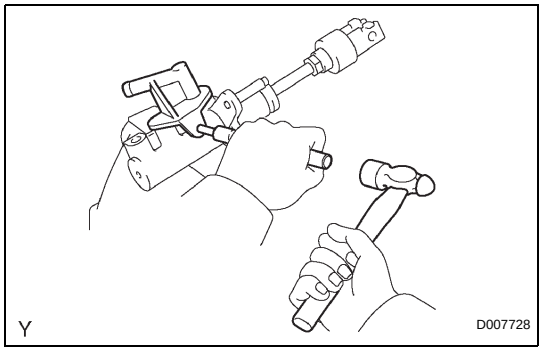

ardiagn.com

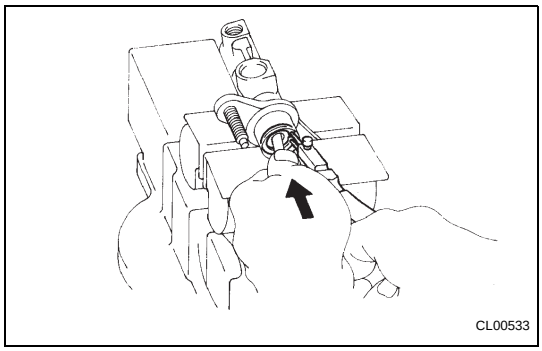

(f) While pushing the push rod, using snap ring pliers, remove the snap ring.
(g) Remove the push rod from the cylinder body.
NOTICE:
The piston may pop up out of the cylinder body. Therefore, slowly remove the push rod from the cylinder body.
(h) Remove the stop plate from the push rod.
(i) Remove the piston with spring from the cylinder.
NOTICE:
Be careful not to damage the inside of the cylinder body.

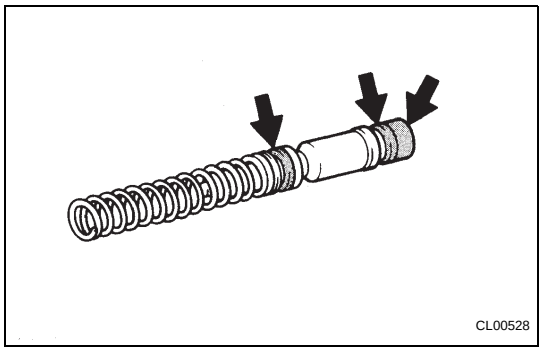

REASSEMBLY

1. INSTALL CLUTCH MASTER CYLINDER KIT

(a) Coat parts with lithium soap base glycol grease, as shown in the illustration.
(b) Install the piston with spring into the cylinder.
NOTICE:
Be careful not to damage the inside of the cylinder body.
(c) Install the stop plate to the push rod.
(d) Install the push rod to the cylinder body.

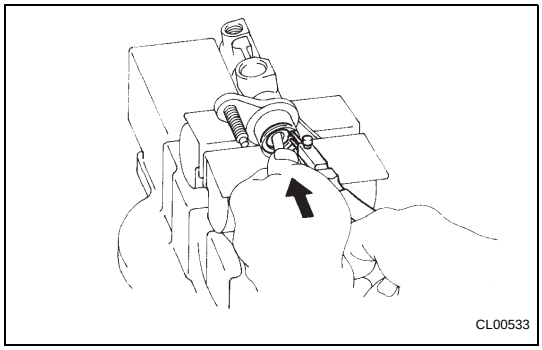

(e) While pushing the push rod, using snap ring pliers, install the snap ring.
(f) Install the boot to the cylinder body.
(g) Install the lock nut to the push rod.
(h) Temporarily install the clevis with the lock nut to the push rod.
(i) Install the inlet union and a new grommet.

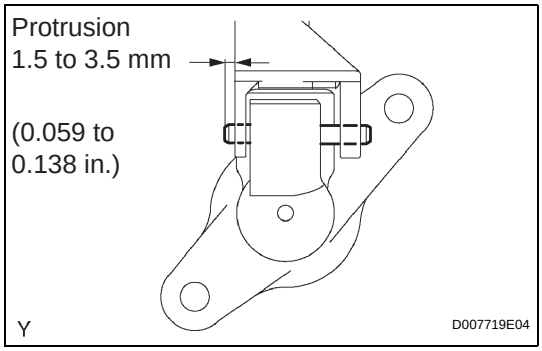

(j) Using a pin punch and a hammer, drive in the slotted spring pin.

cardiagn.com